Staht Ltd, Unit 10 Hayes Lane Trading Estate, Folkes Road, Stourbridge, DY9 8RG, United Kingdom

Tel: +44 0121 817 0620

www.staht.com

Part Number & Description

600-004	t60 Digital Tensile Tester Kit (Including Accessories & Heavy Duty Carry Case)
600-009	t60 Digital Tensile Tester Kit (Including Accessories & Kit Bag)
601-015	Digital Tensile Tester Load Cell, 60kN
600-090	t25 Digital Tensile Tester Kit (including Accessories & Mini HD Carry Case)
600-039	t25 Digital Tensile Tester Kit (including Accessories & Kit Bag)
600-078	t25 Digital Tensile Tester 3 Leg Kit (including Accessories & Mini HD Carry Case)
600-092	t25 Digital Tensile Tester 3 Leg Kit (including Accessories & Kit Bag)
601-031	Digital Tensile Tester Load Cell, 25kN

Applicable Standards

EN 61000-6-3:2007+A1:2011, Radiated Emissions Test

EN 61000-4-2:2009, Electro-Static Discharge Test

EN 61000-4-3+A1:2010 +A2:2010, Power Frequency Magnetic Field Immunity

EN 61000-4-6:2014, Conducted Disturbances Induced by Electromagnetic Fields

Applicable Directives

2014 / 53 / EU, Radio Equipment Directive (RED)

2011 / 65 / EU, Restriction of Hazardous Substances in Electrical and Electronic Equipment Directive (RoHS)



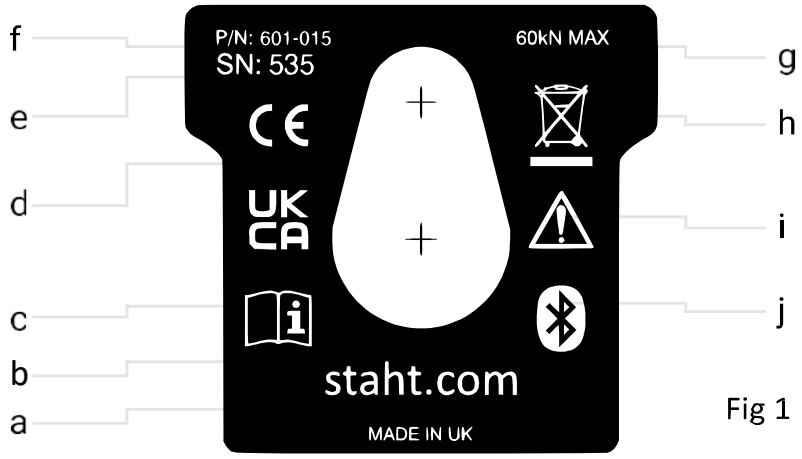

Fig 1

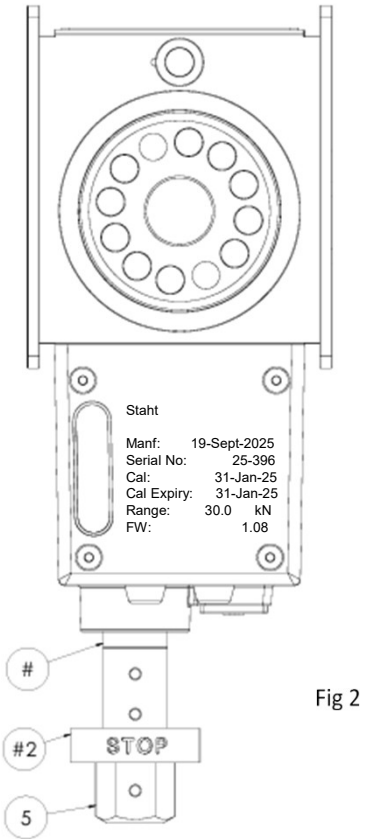

Fig 2

Staht	
Manf:	19-Sept-2025
Serial No:	25-396
Cal:	31-Jan-25
Cal Expiry:	31-Jan-26
Range:	30.0 kN
FW:	1.08

Fig 3

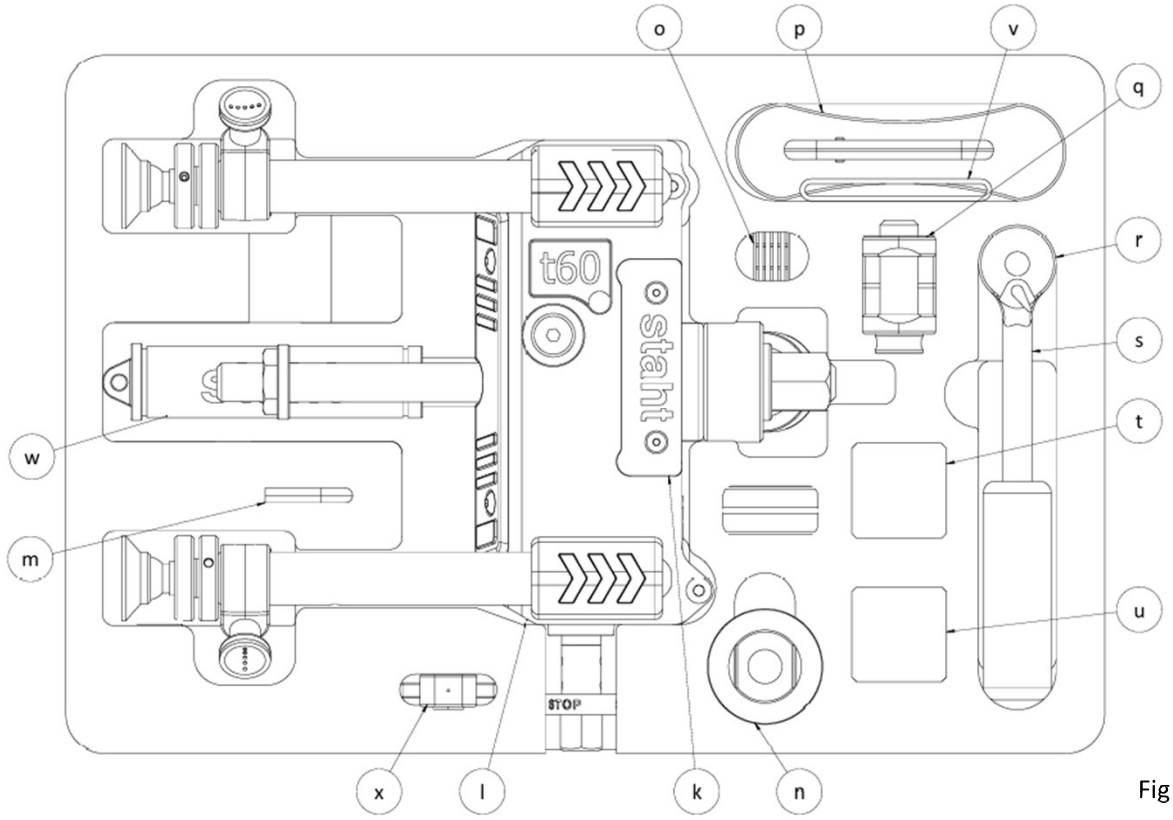
o
p
v
q
r
s
t
u
w
m
x
l
k
n
t60
staht
STOP

Fig 4

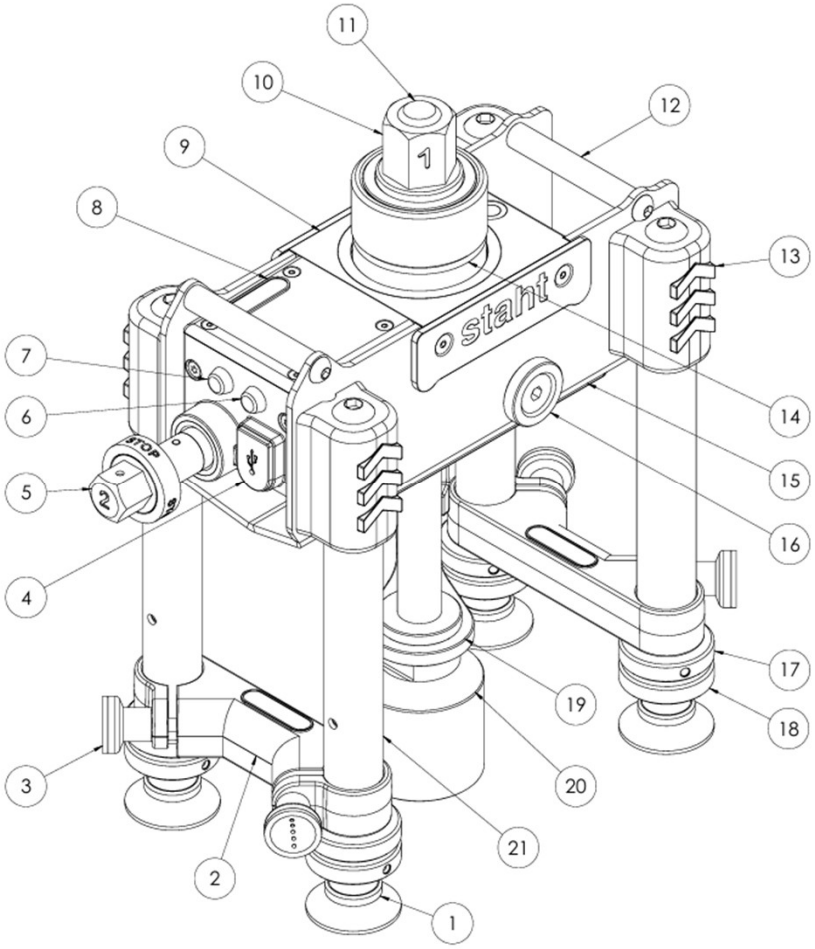
11
10
9
8
7
6
5
4
3
2
1
12
13
14
15
16
17
18
19
20
21
staht
STOP

Fig 5

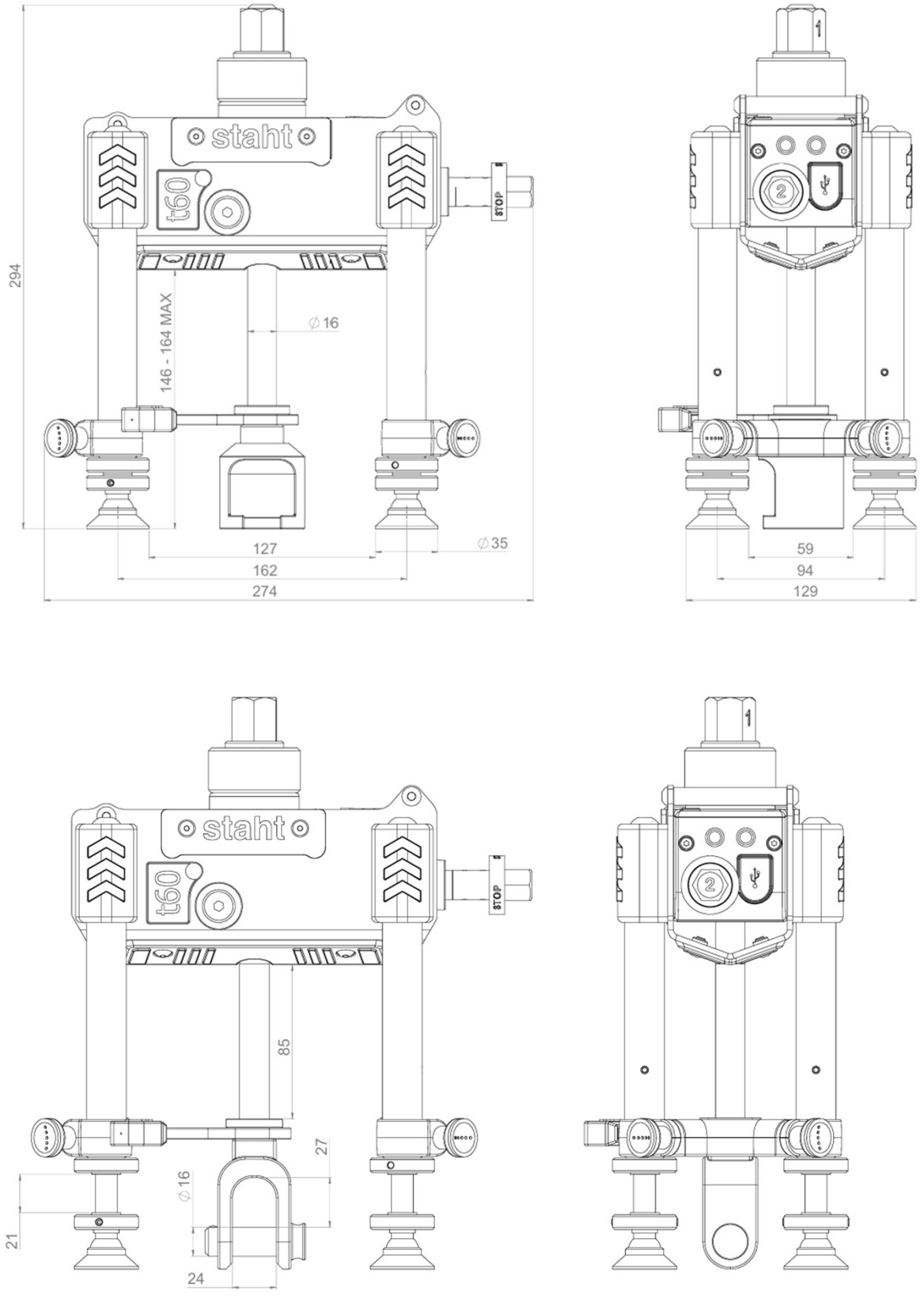
staht
t60
STOP
294
146 - 164 MAX
∅16
127
162
274
∅35
1
2
59
94
129
staht
t60
STOP
85
27
∅16
21
24
1
2

Fig 6

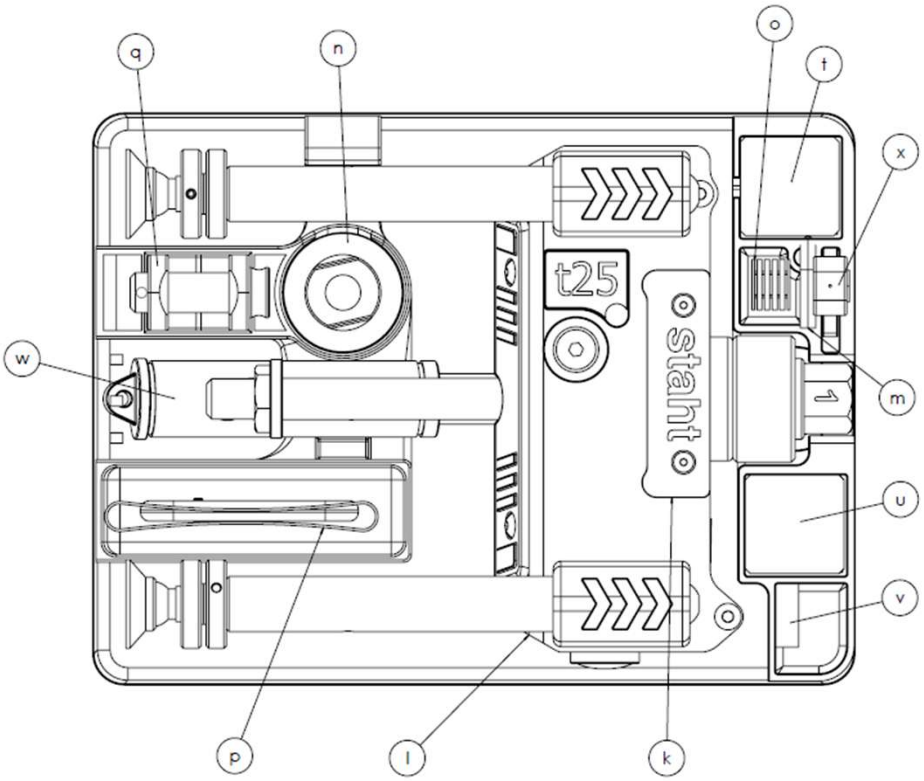
q
n
o
t
x
w
t25
staht
1
m
u
v
p
l
k

Fig 6a

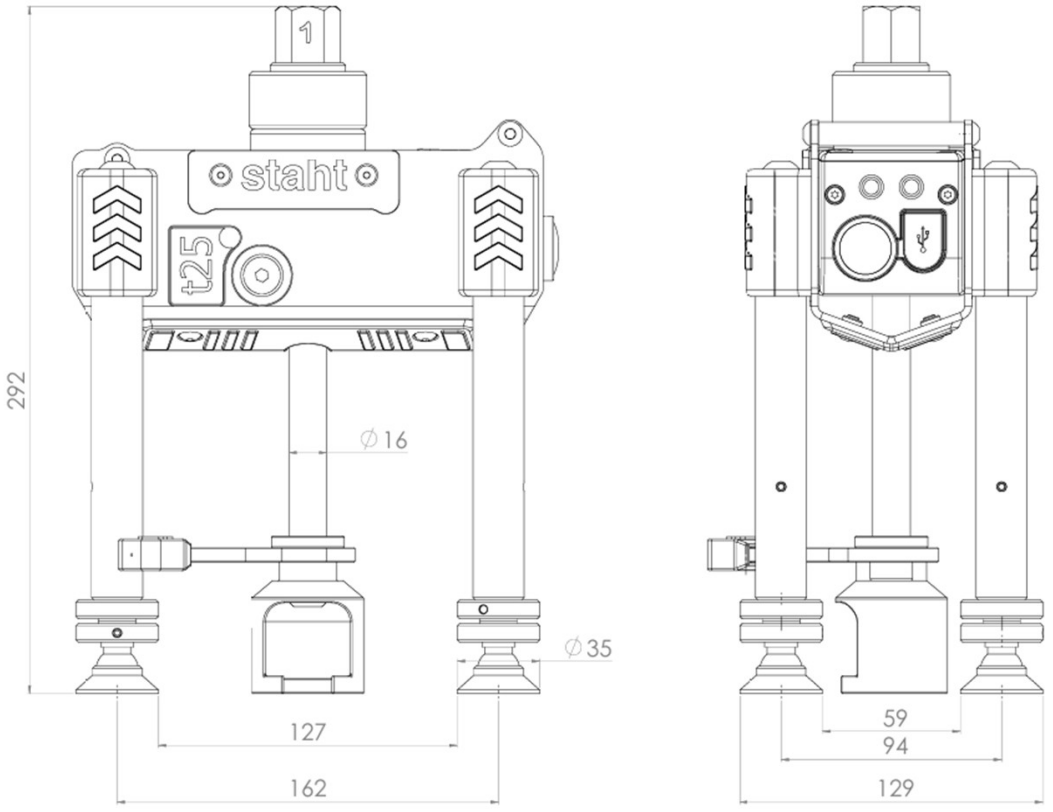
1
staht
t25
292
∅16
∅35
127
162
59
94
129

Fig 6b

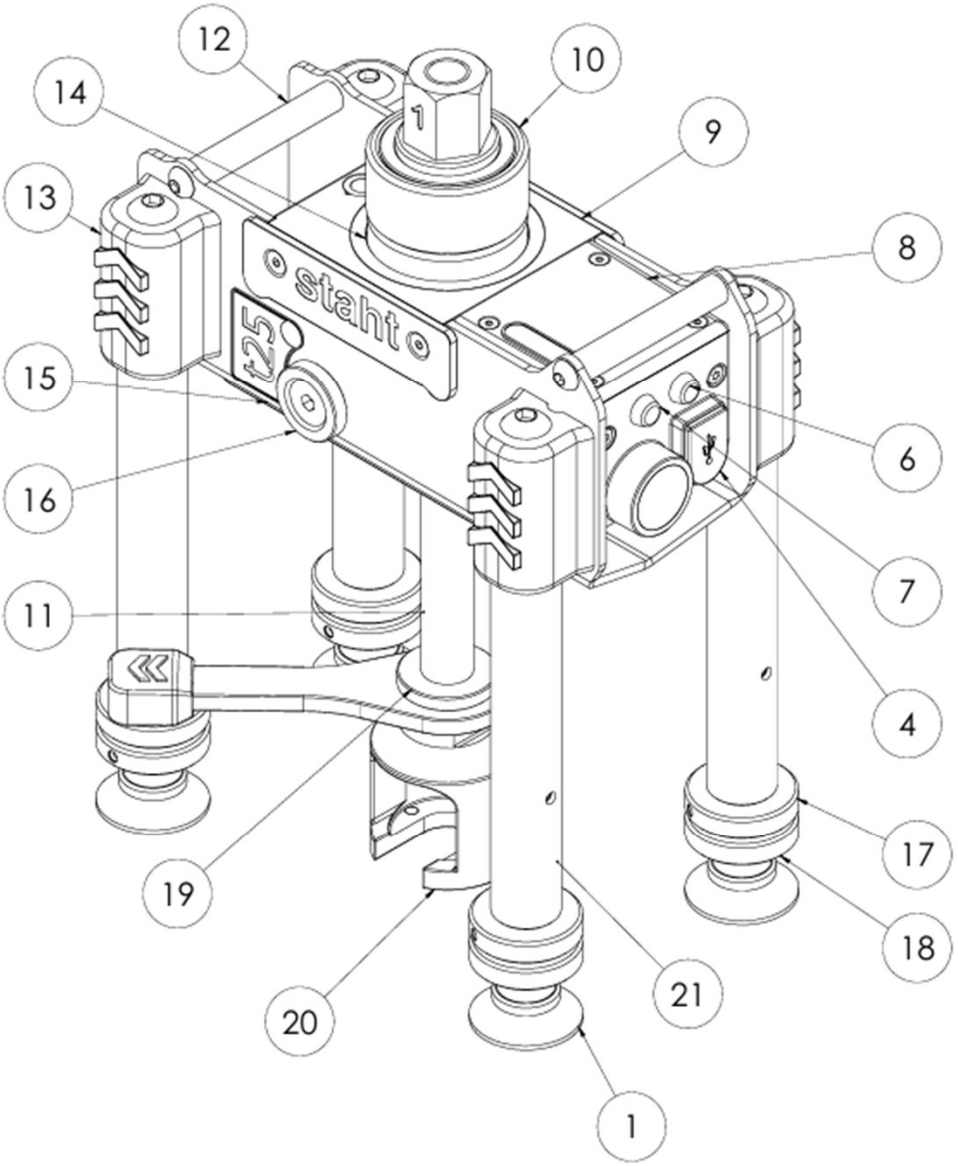

Fig 6c

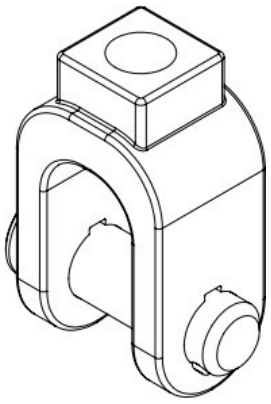

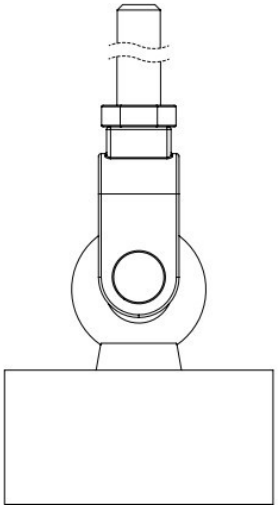

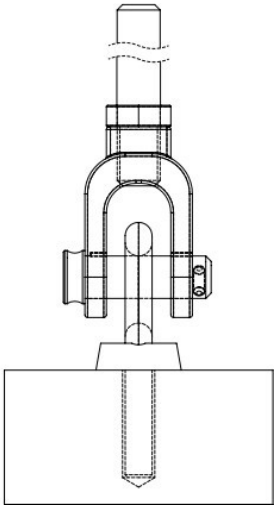

Fig 7



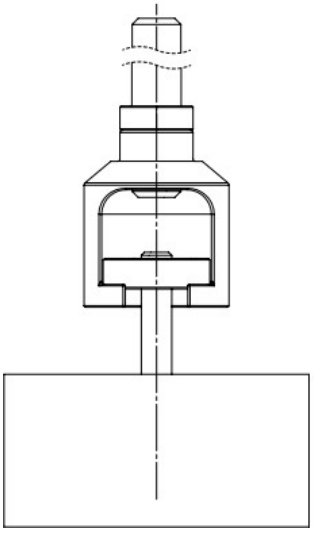

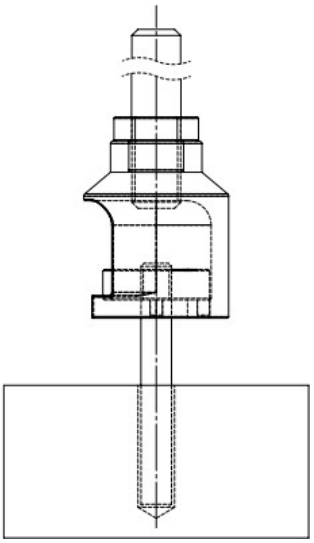

Fig 8

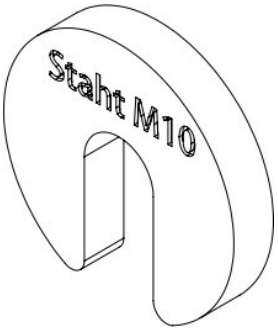

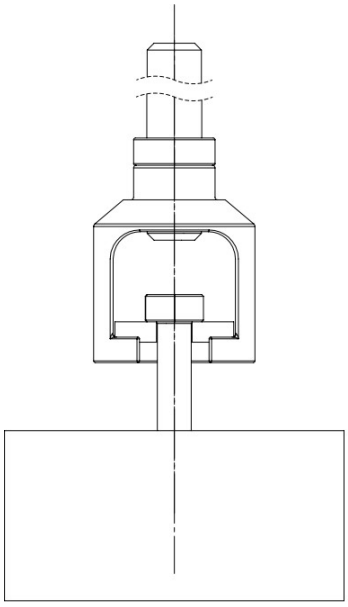

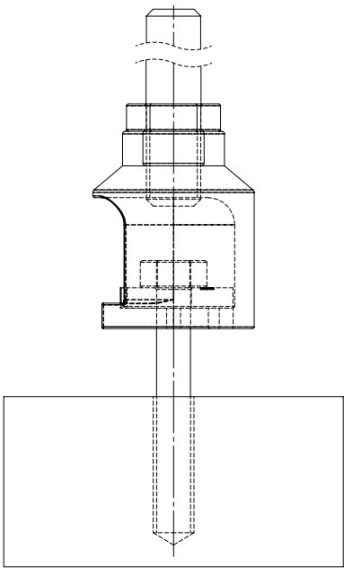

Fig 9

Staht Limited makes no representations or warranties with respect to this manual and, to the maximum extent permitted by law, expressly limits its liability for breach of any warranty that may be implied to the replacement of this manual with another. Furthermore, Staht Limited reserves the right to revise this publication at any time without incurring an obligation to notify any person of the revision. The information provided in this documentation contains general descriptions and/or technical characteristics of the performance of the products contained herein. This documentation is not intended as a substitute for and is not to be used for determining suitability or reliability of these products for specific user applications. It is the duty of any such user or integrator to perform the appropriate and complete risk analysis, evaluation and testing of the products with respect to the relevant specific application or use thereof. Neither Staht Limited nor any of its affiliates or subsidiaries shall be responsible or liable for misuse of the information that is contained herein. If you have any suggestions for improvements or amendments or have found errors in this publication, please notify Staht Limited. All pertinent state, regional, and local safety regulations must be observed when installing and using this product. For reasons of safety and to help ensure compliance with documented system data, only the manufacturer shall perform repairs to components. Failure to observe this information can result in injury or equipment damage.

All rights reserved. No part of this publication may be reproduced, distributed, or transmitted in any form or by any means, including photocopying, recording, or other electronic or mechanical methods, without the prior written permission of the publisher. For permission requests, write to the publisher, addressed “Attention: Permissions Coordinator,” at the address below.

Staht Limited, Unit 10, Hayes Lane Trading Estate, Folkes Road, Stourbridge, DY9 8RG, United Kingdom
Tel: (+44) 121 817 0620 Web: www.staht.com

Intended Use - For load testing headed or threaded anchors and eyebolts up to a maximum of (t25 - 25kN (5620 lbf) or (t60 - 60kN (13,488lbf). Do not exceed the maximum load.

Description of User - This equipment is to be used by a Competent Person. A competent person is someone who has sufficient training and experience or knowledge that allow them to perform the task for which the equipment is designed for effectively and in a safe manner.

Retaining Instructions - Read and understand this manual and its safety instructions before using this product. Failure to do so can result in serious injury or death. Follow all the instructions. This will avoid fire, explosions, electric shocks or other hazards that may result in damage to property and/or severe or fatal injuries.

The product shall only be used by persons who have fully read and understand the contents of this user manual. Ensure that each person who uses the product has read these warnings and instructions and follows them. Keep all safety information and instructions for future reference and pass them on to subsequent users of the product. The manufacturer is not liable for cases of material damage or personal injury caused by incorrect handling or non-compliance with the safety instructions. In such cases, the warranty will be voided.

Personal Protective Equipment (PPE) - When using this product, you should wear all required PPE for the area of operation. As a minimum, you should wear safety boots, work gloves and eye protection when using this equipment, irrespective of local conditions. All protective equipment should be fit for purpose. Staht Limited is not liable for the provision, usage or disposal of any PPE.

Storage and Transportation - When not in use, store the equipment in the Carry Case or the Kit Bag. Store in a dry, secure place, in a temperature between 0-25°C. If storing for longer than 90 days without use, power cycle the battery. If transporting by air, transport with a reduced charge (<50%)

Troubleshooting / Frequently Asked Questions – Please refer to www.staht.com for more information.

Environment – Use in temperatures between -10°C and + 50°C. Do not use underwater, or in heavy rain. :Use of this equipment in areas with environmental hazards may require additional precautions to prevent injury to the user or damage to the equipment. Hazards may include, but are not limited to; heat, chemicals, corrosive environments, high voltage power lines, gases, moving machinery, and sharp edges.

Maintenance - Check equipment before each use. Keep the equipment clean and dry. To clean, use a clean damp cloth and light detergent and dry. Use a clean brush to keep all threads clear from dirt, dust and debris. Lubrication requirements are detailed in the lubrication section below.

Lubrication – The M16 Threaded Drop Rod used on the t25 (25kN Tester) & T60 (60kN Tester) must be cleaned and lubricated regularly to reduce friction. Apply Staht Drop Rod Grease or equivalent to the drop rod threaded working area. **CAUTION**: Failure to lubricate the drop rod will cause increased friction and wear on the product.

Servicing – All servicing must be done by Staht Limited, or an approved Staht Service Agent. No modifications are permitted to Staht equipment. Only use genuine Staht parts and accessories.

Calibration - From the date of purchase, the tester is calibrated for one year. The "calibration date" and the "next calibration date“ can be found on the calibration certificate, the display screen on startup and in the app and web dashboard. We recommend calibration should be performed annually to relevant National / International Standards by Staht, a Staht service agent or an approved third party. **CAUTION**: Failure to calibrate the tester prior to the next calibration date may invalidate any test data.

Removing the Load Cell -Unscrew the QR Knobs (16) from either side of the bridge.
Lift the load cell (9) from the bridge. To re-install, reverse the procedure.
CAUTION: Take care to align the screws when reinstalling.

Replacing the Display Cover (8) – Unscrew the four screws using a 2mm hex key. Remove the Display Cover & Gasket. Replace the Display Cover & Gasket and add the four screws. **CAUTION:** Do not over-tighten screws. Hand tighten until the gasket is compressed and a no gaps can be seen between the screen and load cell case.

Charging - On first use, charge the battery to 100% using USB-C cable (o) provided and a suitable USB plug (not provided) to a mains power source. Locate and lift the charging cover (4) to locate the USB-C charging port. When finished charging, remove USB-C cable. Push the protective cover back in place.

Disposal – Dispose of any Electric or Electronic components in accordance with local regulations. Other components should be disposed / recycled responsibly.

1 Year Guarantee – Against any material or manufacturing defect. Exclusions: normal wear and tear, oxidation, modifications or alterations, incorrect storage, poor maintenance, negligence, uses for which this product is not designed.

2. Nomenclature

Fig 1 - (a) Country of Origin, (b) Manufacturer, (c) Read Instructions Symbol, (d) Compliance Symbols, (e) Serial Number, (f) Part Number, (g) Maximum Working Load, (h) WEEE compliance symbol, (i) Warning symbol, (j) Bluetooth capability symbol.

Fig 2 - (#) Red Warning Ring, (5) Hex Drive, #2 Red STOP Warning Ring

Fig 3 - Manf – Date of Manufacture, Serial No. – Serial Number, Cal – Date of Last Calibration, Cal Expiry - Date of Next Calibration, FW – Firmware Version

Fig 4 – (k) Digital Tensile Tester Load Cell, (l) Bridge, (m) 6mm Hex Key, (n) Anchor Jaw, (o) USB- C Cable, (p) Tool Lanyard for Tester, (q) Clevis, (r) 17mm Socket, (s) 3/8” Socket Wrench c/w Wrist Lanyard, (t) Threaded Washer Pack, (u) Slotted Washer Pack (v) Wrist Lanyard (w) 24mm Ratchet Spanner (x) Anti Rotation Arm

Fig 5- (1) Foot, (2) Leg Brace, (3) Leg Brace Adjuster, (4) USB-C Charging Port, (5) Hex Drive (17mm AF), (6) Green Button (on / off), (7) Yellow Button, (8) Display, (9) Load Cell, (10) Sealed Thrust Nut, (11) Drop Rod, (12) Brace bar, (13) Protective cover, (14) Primary Piston, (15) Grip, (16) QR Knob, (17) Knurled Lock Nut, (18) Foot Adjuster, (19) Anti Rotation Arm, (20) Anchor Jaw, (21) Leg.

Fig 6a – (k) Digital Tensile Tester Load Cell (l) Bridge, 25kN, (m) 6mm Hex Key, (n) Anchor Jaw, (o) USB-C Cable, (p) Tool Lanyard for Tester, (q) Clevis, (t) Threaded Washer Pack, (u) Slotted Washer Pack (v) Wrist Lanyard (w) 24mm Ratchet Spanner (x) Anti Rotation Arm

Fig 6c - (1) Foot, (4) USB-C Charging Port, (6) Green Button (on / off), (7) Yellow Button, (8) Display, (9) Load Cell, (10) Sealed Thrust Nut, (11) Drop Rod, (12) Brace bar, (13) Protective cover, (14) Primary Piston, (15) Grip, (16) QR Knob, (17) Knurled Lock Nut, (18) Foot Adjuster, (19) Anti Rotation Arm, (20) Anchor Jaw, (21) Leg

3. Test Preparation

On first use, charge the battery to 100% using USB-C cable (o) provided and a suitable USB plug (not provided) to a mains power source.

Before starting the Test Procedure follow the preparation steps below.

WARNING - When working at height ensure the tool lanyards are used to secure the tester and the socket wrench or 24mm Ratchet Spanner, see separate user instructions provided.

WARNING– if the anchor is not installed perpendicular to the surface, DO NOT TEST.

Adaptor Selection - To test threaded or headed anchors use the Anchor Jaw (n). For safety eye bolts, lifting eyes and ring bolts use the Clevis (q).

Fitting the Anchor Jaw to the Drop Rod (11) – Screw the drop rod fully into the Anchor Jaw (20) or Clevis (q) up to the M16 Anti Rotation Arm(19).

Using the Clevis (See Fig 7) - Rotate the pin with the slot and pull back through the Clevis. Position the Clevis over the eye bolt, push the pin back through the Clevis and rotate 180° to lock.

Washer Selection for Anchor Jaw – Threaded Anchors (See Fig 8) – Select the correct Threaded Washer (t) and screw it onto the anchor leaving at least one thread of the anchor showing. Locate the Anchor Jaw (20) under the Threaded Washer, ensuring that the Threaded Washer is central inside the Anchor Jaw.

Washer Selection for Anchor Jaw – Headed Anchors / Bolts (See Fig 9) – Select the correct sized Slotted Washer (u) and locate in the Anchor Jaw(20), ensuring it is central. Locate this under the head of the anchor, ensuring the anchor is central at the bottom of the slot. Note: The Anchor Jaw has magnets to aid the retention of the Slotted Washer.

Testing Socket Anchors - screw in a suitable threaded or headed anchor (not provided) until it has full engagement with the socket, then follow the Washer Selection instructions detailed above.

Leg Brace Adjustment- To adjust, loosen the leg brace adjusters (3). Slide the leg brace(2) to lowest possible position. Hand-tighten the adjusters to secure leg brace in position. Do not remove adjuster or over-tighten.

Height / Level Adjustment - Unscrew the foot (1) using the foot adjustment disc (18) to the required height. Screw the locking adjusting disc (17) against the leg to lock in position. Repeat on all feet until the required height is reached, checking the level bubble is central and the bridge is stable. For horizontal surfaces refer to bubble level on top. For vertical surfaces refer to bubble level on side.
Note: On inclined surfaces greater than 0° (horizontal), but less than 90° (vertical), do not use bubble level.

4. Screen Functions

Press <GREEN> button (6) – Power On
Long Press <GREEN> button (6) (3 seconds) – Power Off
Press <YELLOW> button (7) – Peak Load On / Off (press to reset)
Long Press <YELLOW> button (7) (3 seconds) – Unit selection (kN / lbf)

5. Test Procedures for t60 - MAX 60kN

WARNING: Do not exceed the maximum test loads for an anchor. Consult the anchor manufacturer for further guidance. Do not exceed the maximum test loads for the t60 tester MAX 60kN (13,488lbf)

WARNING: Do not use electric drill drivers or impact drivers to apply torque to the Hex Drive(5).

WARNING: Allow a minimum of 5mm clearance between the M16 Anti Rotation Arm(19) and the Grip(15)

t60 Proof Load Testing Procedure (if using the Staht App follow the on-screen instructions)

i. Use the Socket Wrench(s) to rotate the Hex Drive (Marked "2") counter-clockwise until the Red marker (# Hex Drive Marker) is visible (See Fig 2). This is the starting position for the hex drive.
i. Press the <GREEN> button (6) to turn on.
ii. Hand tighten the Thrust Nut(Marked "1") to a minimum of 0.4kN (90lbf)
iii. Adjust all feet down onto the test surface to ensure the bridge is level & stable, ready for testing.
iv. Position & tighten the leg braces (4) to the lowest possible position.
v. Use the 24mm Ratchet Spanner (w) to apply force to the Thrust Nut in a clockwise motion until the target force is reached, up to a maximum of 30kN (6744 lbf). If you require fine load control AND/ OR you would like to go beyond 30kN (6744 lbf) up to a maximum of 60KN (13,488lbf) follow the steps below.
vi. Apply force to the Hex Drive (Marked "2") by rotating the Socket Wrench(s) clockwise until the target load (+5%) is achieved. e.g. 50kN + 5% is 52.5 kN. **WARNING – STOP** if the Hex Drive STOP #2 touches the tester housing.
vii. Wait approx. 30 seconds for the force to settle and top up the force to the target +5% if required.
viii. Monitor the force until the time required elapses. (The test is a PASS if the force stays above the target for the duration of the timed section)
ix. To remove the force, reverse the direction of rotation on the Socket Wrench (s) until the inner Red Marker (#) is visible on the Hex Drive(Marked "2")
x. Remove any remaining force from Top Nut(10) by rotating the 24mm Reversible Ratchet Spanner(x) anticlockwise until the reading shows 0 kN.
xi. To turn off the tester press and Hold the <GREEN> Button.

t60 Ultimate Resistance Testing Procedure (if using the Staht App follow the on-screen instructions)

i. Use the Socket Wrench(s) to rotate the Hex Drive (Marked "2") counter-clockwise until the Red marker (Hex Drive Marker #) is visible (See Fig 2). This is the starting position for the hex drive.
ii. Press the <GREEN> button (6) to turn on. Press the yellow button (7) once (short press) to activate the peak hold function.
iii. Tighten the Top Nut (10) by hand to a minimum of 0.4kN (90 lbf)
iv. Adjust all feet(18) down onto the test surface to ensure the bridge is level & stable, ready for testing.
v. Position & tighten the leg braces (4) to the lowest possible position.
vi. Use the 24mm Reversible Ratchet Spanner (w) to apply force to the Thrust Nut in a clockwise motion up to a maximum of 30kN (6744 lbf). If you require fine load control AND/ OR you would like to go beyond 30kN up to a maximum of 60KN (13,488 lbf) follow the steps below.
vii. Apply force to the Hex Drive (Marked "2") by rotating the Socket Wrench(s) clockwise. Keep applying force until failure occurs AND / OR the force starts to consistently drop. Record the Peak force (failure force). **WARNING – STOP** if the Hex Drive STOP #2 touches the tester housing.
viii. To remove the force, reverse the direction of rotation on the Socket Wrench (s) until the inner Red Marker (#) is visible on the Hex Drive(Marked "2")
ix. Remove any remaining force from Thrust Nut (10) by rotating the 24mm Reversible Ratchet Spanner(w) anticlockwise until the reading shows 0 kN.
x. To clear the Peak Hold reading press the <Yellow> Button once.
xi. To turn off the tester press and Hold the <GREEN> Button.

6. Test Procedures for t25 - MAX 25kN

WARNING: Do not exceed the maximum test loads for an anchor. Consult the anchor manufacturer for further guidance. Do not exceed the maximum test loads for the t25 tester MAX 25kN (5,620 lbf)

WARNING: Allow a minimum of 5mm clearance between the M16 Anti Rotation Arm(19) and the Grip(15)

t25 Proof Load Testing Procedure (if using the Staht App follow the on-screen instructions)

i. Press the <GREEN> button (6) to turn on.
ii. Fully tighten the Thrust Nut (10) by hand to 0.4kN (90 lbf)
iii. Adjust all Feet down(18) onto the test surface to ensure the bridge is level & stable, ready for testing.
iv. Place the 24mm Ratchet(v) on the Sealed Thrust Nut(10) and rotate clockwise to apply force until the target load (+5%) is achieved. e.g. 10kN + 5% is 10.5kN
v. Hold the force until the time has elapsed.
vi. To remove the load, reverse the 24mm Ratchet(v).
vii. To turn off the tester press and Hold the <GREEN> Button.

t25 Ultimate Resistance Testing Procedure (if using the Staht App follow the on-screen instructions)

i. Press the <GREEN> button (6) to turn on. Press the yellow button(7) once (short press) to activate the peak hold function.
ii. Fully tighten the Sealed Thrust Nut (10) by hand 0.4kN (90 lbf)
iii. Adjust all feet(18) down onto the test surface to ensure the bridge is level & stable, ready for testing.
iv. Place the 24mm Ratchet(v) on the Sealed Thrust Nut(10) and rotate clockwise to apply force until the failure load is reached.
v. To remove the load, reverse the 24mm Ratchet Spanner(w).
vi. Press the yellow button(7) again to clear the peak load.
vii. To turn off the tester press and hold the <GREEN> Button.

Declaration of Conformity

Staht Limited declares, under its sole-responsibility that the products named on this document have been tested to the Standards stated on this document and complies with the Directives stated.

Approved Signatory RHirst **Date** 20/09/2021

Robert Hirst, Managing Director

staht