Staht Ltd, Unit 10 Hayes Lane Trading Estate, Folkes Road, Lye DY9 8RG

Tel: +44 0121 817 0620

www.staht.com

Part Number & Description

200-000	Shear Test Kit c/w T60 Load Cell, Bag & Accessories
200-004	Shear Test Kit c/w Bag & Accessories (no load cell)
200-007	Shear Test Kit c/w T25 Load Cell, Bag & Accessories

Applicable Standards (Applicable to the Load Cell)

EN 61000-6-3:2007+A1:2011, Radiated Emissions Test

EN 61000-4-2:2009, Electro-Static Discharge Test

EN 61000-4-3+A1:2010 +A2:2010, Power Frequency Magnetic Field Immunity

EN 61000-4-6:2014, Conducted Disturbances Induced by Electromagnetic Fields

Applicable Directives (Applicable to the Load Cell)

2014 / 53 / EU, Radio Equipment Directive (RED)

2011 / 65 / EU, Restriction of Hazardous Substances in Electrical and Electronic Equipment Directive (RoHS)

⚠WARNING







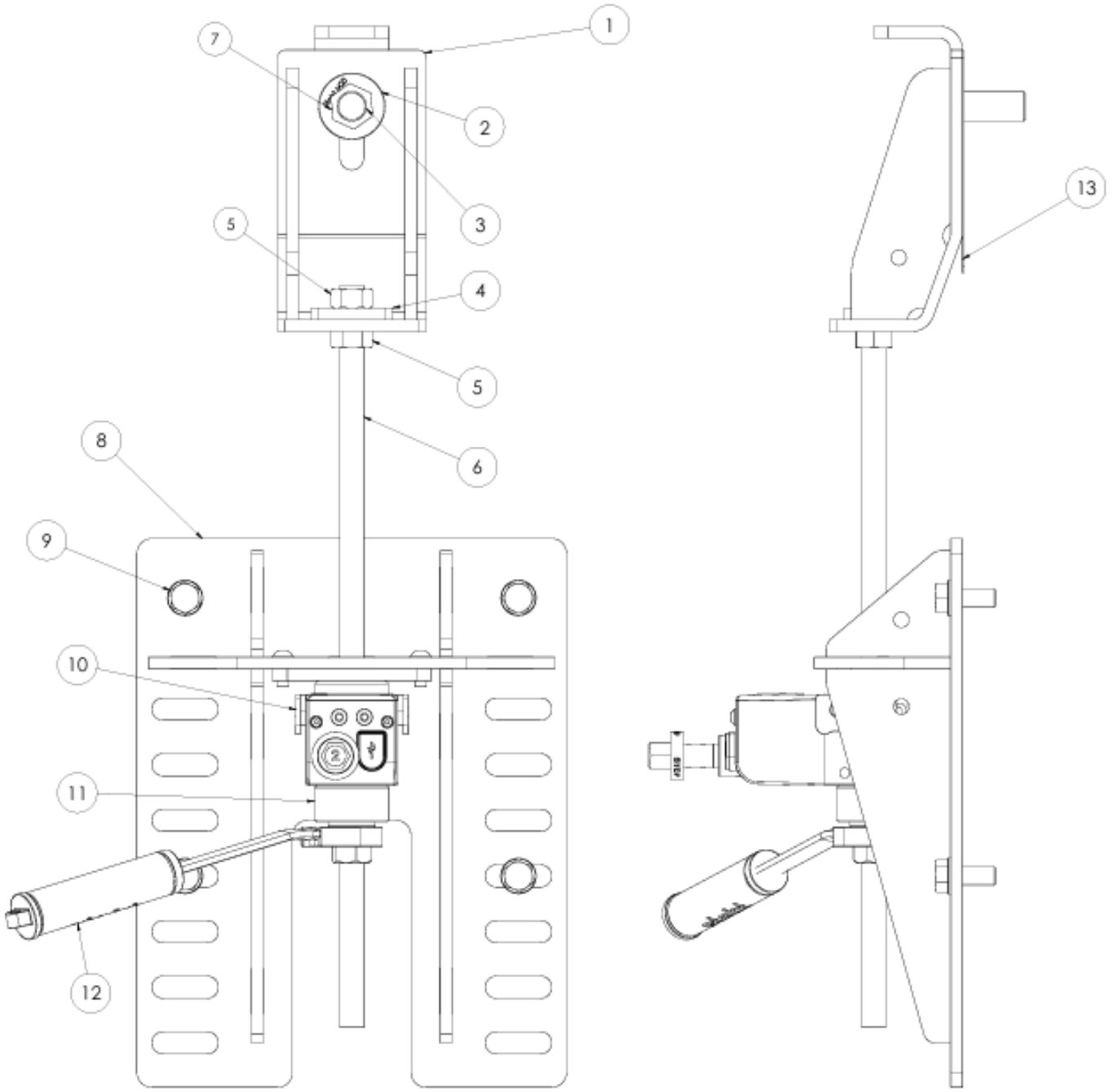

Fig 1

Staht Limited makes no representations or warranties with respect to this manual and, to the maximum extent permitted by law, expressly limits its liability for breach of any warranty that may be implied to the replacement of this manual with another. Furthermore, Staht Limited reserves the right to revise this publication at any time without incurring an obligation to notify any person of the revision. The information provided in this documentation contains general descriptions and/or technical characteristics of the performance of the products contained herein. This documentation is not intended as a substitute for and is not to be used for determining suitability or reliability of these products for specific user applications. It is the duty of any such user or integrator to perform the appropriate and complete risk analysis, evaluation and testing of the products with respect to the relevant specific application or use thereof. Neither Staht Limited nor any of its affiliates or subsidiaries shall be responsible or liable for misuse of the information that is contained herein. If you have any suggestions for improvements or amendments or have found errors in this publication, please notify Staht Limited. All pertinent state, regional, and local safety regulations must be observed when installing and using this product. For reasons of safety and to help ensure compliance with documented system data, only the manufacturer shall perform repairs to components. Failure to observe this information can result in injury or equipment damage.

All rights reserved. No part of this publication may be reproduced, distributed, or transmitted in any form or by any means, including photocopying, recording, or other electronic or mechanical methods, without the prior written permission of the publisher. For permission requests, write to the publisher, addressed “Attention: Permissions Coordinator,” at the address below.

Staht Limited, Unit 10 Hayes Lane Trading Estate, Folkes Road, Lye, DY9 8RG, United Kingdom
United Kingdom Tel: (+44) 121 817 0620 Web: www.staht.com

Intended Use - For shear load testing headed or threaded anchors and eyebolts up to a maximum of (t25 - 25kN (5620 lbf) or (t60 - 60kN (13,488lbf). Do not exceed the maximum load.

Description of User - This equipment is to be used by a Competent Person. A competent person is someone who has sufficient training and experience or knowledge that allow them to perform the task for which the equipment is designed for effectively and in a safe manner.

Retaining Instructions - Read and understand this manual and its safety instructions before using this product. Failure to do so can result in serious injury or death. Follow all the instructions. This will avoid fire, explosions, electric shocks or other hazards that may result in damage to property and/or severe or fatal injuries.

The product shall only be used by persons who have fully read and understand the contents of this user manual. Ensure that each person who uses the product has read these warnings and instructions and follows them. Keep all safety information and instructions for future reference and pass them on to subsequent users of the product. The manufacturer is not liable for cases of material damage or personal injury caused by incorrect handling or non-compliance with the safety instructions. In such cases, the warranty will be voided.

Personal Protective Equipment (PPE) - When using this product, you should wear all required PPE for the area of operation. As a minimum, you should wear safety boots, work gloves and eye protection when using this equipment, irrespective of local conditions. All protective equipment should be fit for purpose. Staht Limited is not liable for the provision, usage or disposal of any PPE.

Storage and Transportation - When not in use, store the equipment in the Carry Case or the Kit Bag. Store in a dry, secure place, in a temperature between 0-25°C. If storing for longer than 90 days without use, power cycle the battery. If transporting by air, transport with a reduced charge (<50%)

Environment – Use in temperatures between -10°C and + 50°C. Do not use underwater, or in heavy rain. :Use of this equipment in areas with environmental hazards may require additional precautions to prevent injury to the user or damage to the equipment. Hazards may include, but are not limited to; heat, chemicals, corrosive environments, high voltage power lines, gases, moving machinery, and sharp edges.

Maintenance - Check equipment before each use. Keep the equipment clean and dry. To clean, use a clean damp cloth and light detergent and dry. Use a clean brush to keep all threads clear from dirt, dust and debris. Lubrication requirements are detailed in the lubrication section below.

Lubrication – The M16 Threaded Rod (6) used on the Shear Tester must be cleaned and lubricated regularly to reduce friction. Dirt, grit, concrete & brick dust must be removed from the thread surface. Apply a light oil or Staht Drop Rod Grease (3 in 1, WD40, GT85 or similar) to the working area between the rod and the thrust nut.

Servicing – All servicing must be done by Staht Limited, or an approved Staht Service Agent. No modifications are permitted to Staht equipment. Only use genuine Staht parts and accessories.

Calibration - From the date of purchase, the tester is calibrated for one year. The "calibration date" and the "next calibration date“ can be found on the calibration certificate, the display screen on startup and in the app and web dashboard. We recommend calibration should be performed annually to relevant National / International Standards by Staht or an approved third party. **CAUTION**: Failure to calibrate the tester prior to the next calibration date may invalidate any test data.

Removing the Load Cell from the t60 / t25 Bridge -Unscrew the QR Knobs from the bridge. Lift the load cell from the bridge. To re-install, reverse the procedure.

1 Year Guarantee – Against any material or manufacturing defect. Exclusions: normal wear and tear, oxidation, modifications or alterations, incorrect storage, poor maintenance, negligence, uses for which this product is not designed.

Troubleshooting / Frequently Asked Questions – Please refer to www.staht.com for more information.

Refer to t25 or t60 user instruction manual for instructions on how to use the tester and digital load cell.

2. Nomenclature

Fig 1 – (1) Shear Test Head, (2) Shear Head Bush, (3) Fixing to be tested, (4) Shear Head Reinforcing Plate, (5) M16 Nut(Fine pitch) (6) M16 Drop Rod (Fine Pitch) (7) Retaining Nut OR Staht Threaded Washer (8) Anchor Plate, (9) Anchor Plate Fixing, Max 14mm OD (Not Supplied) (10) Load Cell t25 / t60, (11) Thrust Nut, (12) 24mm Reversible Ratchet Spanner (13) Anti Friction Plate

3. Test Preparation

On first use, charge the load cell battery to 100% using USB-C cable provided and a suitable USB plug (not provided) to a mains power source. Read the User Instruction Manual from the t25 / t60 to ensure the user is fully aware of the functionality of the Load Cell.

Before starting the Test Procedure follow the preparation steps below.

WARNING - When working at height ensure the tool lanyards are used to secure the tester and the socket wrench, see separate user instructions provided.

WARNING– if the anchor is not installed perpendicular to the surface, DO NOT TEST.

WARNING - The Staht Shear Testing Rig is designed to test anchor studs or bolts from M6 to M20. Only for use with the Staht T25 or T60 Load Cell, to a maximum force of 60kN. (13,488 lbf).

WARNING – All anchors should be selected and installed by a competent person. The anchors used in the test are sacrificial and MUST not be used for the final application.

4. Test Procedures for the Shear Test Rig with the t60 Load Cell - MAX 60kN

WARNING: Do not exceed the maximum test loads for an anchor. Consult the anchor manufacturer for further guidance. Do not exceed the maximum test loads for the t60 tester MAX 60kN (13,488lbf)

WARNING: Specify appropriate anchors for the substrate.

WARNING: Do not use electric drill drivers or impact drivers to apply torque to the Hex Drive.

i. Install the anchor to be tested in a suitable test position. Typically, clear of edges and / or in the centre of a brick. The anchor must be installed inline with the anchor manufacturer's instructions. Studs should protrude by approx. 30mm minimum from the surface of the substrate.
ii. Place the (13) Anti Friction Plate over the stud.
iii. Add the (1) Shear Test Head, (2) Shear Head Bush of the right size and lock in place with a (7) Retaining Nut OR Staht Threaded Washer. The Nut or Bush only needs to be finger tight; this will allow the shear test head to slide on the friction plate.
iv. Marking the Anchor Positions - Thread the (8) Anchor Plate, (10) Load Cell t25 / t60 and (11) Thrust Nut onto the (6) M16 Drop Rod. **See Fig 1**. Position the Anchor Plate in a suitable position relative the shear test head (minimum 300mm away) and the underlying substrate. **Note**: If you are mounting on brick then align the fixings with the centre of the bricks. Minimum 4 fixings spaced as wide apart as possible on the anchor plate. Review the minimum anchor spacings on the anchor technical datasheets and review the ETA (European Technical Approval) for the anchor shear performance if available.
v. Mark the Anchor Positions.
vi. Remove the Anchor Plate and drill the four marked positions. Ensuring the correct diameter drill is being used. (We recommend 3 or 4 tipped SDS drills for best results)
vii. Clean the holes thoroughly.
viii. Reposition the (8) Anchor Plate, (10) Load Cell t25 / t60 and (11) Thrust Nut onto the (6) M16 Drop Rod and torque the anchors in place. (refer to anchor manufacturers guidelines)
ix. Turn on the load cell and open the App if you are using Staht Connect. (follow on screen instructions) Apply the specified test force by turning the 24mm Reversible Ratchet Spanner (12) in a clockwise motion up to a maximum of 25kN and observe any movement, bending and / or yielding of the substrate. If you need to exceed 25kN use the 17mm ratchet on the Hex Drive on the side of the t60 Load Cell until the target load is reached. **Note** the red markings on the hex drive indicating the maximum limits of its operation. Max Force 60kN.
x. Make note of the anchor performance on the App or by making notes and taking photos.
xi. Once testing is complete remove the force and reverse the process above. Test fixings should be removed or cut off after testing to prevent misuse.

5. Test Procedures for the Shear Test Rig with the t25 Load Cell - MAX 25kN

WARNING: Do not exceed the maximum test loads for an anchor. Consult the anchor manufacturer for further guidance. Do not exceed the maximum test loads for the t25 tester MAX 25kN (5620 lbf)

WARNING: Specify appropriate anchors for the substrate.

i. Install the anchor to be tested in a suitable test position. Typically, clear of edges and / or in the centre of a brick. The anchor must be installed inline with the anchor manufacturer's instructions. Studs should protrude by approx. 30mm minimum from the surface of the substrate.
ii. Place the (13) Anti Friction Plate over the stud.
iii. Add the (1) Shear Test Head, (2) Shear Head Bush of the right size and lock in place with a (7) Retaining Nut OR Staht Threaded Washer. The Nut or Bush only needs to be finger tight; this will allow the shear test head to slide on the friction plate.
iv. Marking the Anchor Positions - Thread the (8) Anchor Plate, (10) Load Cell t25 / t60 and (11) Thrust Nut onto the (6) M16 Drop Rod. **See Fig 1**. Position the Anchor Plate in a suitable position relative the shear test head (minimum 300mm away) and the underlying substrate. **Note**: If you are mounting on brick then align the fixings with the centre of the bricks. Minimum 4 fixings spaced as wide apart as possible on the anchor plate. Review the minimum anchor spacings on the anchor technical datasheets and review the ETA (European Technical Approval) for the anchor shear performance if available.
v. Mark the Anchor Positions.
vi. Remove the Anchor Plate and drill the four marked positions. Ensuring the correct diameter drill is being used. (We recommend 3 or 4 tipped SDS drills for best results)
vii. Clean the holes thoroughly.
viii. Reposition the (8) Anchor Plate, (10) Load Cell t25 / t60 and (11) Thrust Nut onto the (6) M16 Drop Rod and torque the anchors in place. (refer to anchor manufacturers guidelines)
ix. Turn on the load cell and open the App if you are using Staht Connect. (follow on screen instructions) Apply the specified test force by turning the 24mm Reversible Ratchet Spanner (12) in a clockwise motion up to a maximum of 25kN and observe any movement, bending and / or yielding of the substrate. Make note of the anchor performance on the App or by making notes and taking photos.
x. Once testing is complete remove the force and reverse the process above. Test fixings should be removed or cut off after testing to prevent misuse.

Declaration of Conformity

Staht Limited declares, under its sole-responsibility that the products named on this document have been tested to the Standards stated on this document and complies with the Directives stated.

Approved Signatory RHirst **Date** 20/09/2021

Robert Hirst, Managing Director

staht